Dart Aerospace Ltd.

Date: Friday, 25/04/2008 8:18:43 AM
User: Jean-Luc Menard

Process Sheet

SPLIT - 2

Customer	: CU-DAR001 Dart Helicopters Services	Drawing Name	: BLADE FITTING
Job Number	: 38786		
Estimate Number	: 12299		
P.O. Number	:	Part Number	: D3488041
This Issue	: 25/04/2008 S.O. No. :	Drawing Number	: D3488 / DSK101
Prsht Rev.	: NC	Project Number	: N/A
First Issue	: / / Type : MACHINED PARTS	Drawing Revision	: B / D
Previous Run	: 38465	Material	:
Written By	: 02.04.25.	Due Date	: 02/05/2008 Qty: ~~18~~ 16 Um: Each
Checked & Approved By	:		
Comment	: Est Rev:A New Issue 06-02-28 JLM Est Rev:B As per Rev B 06-03-30 JLM Est Rev:C Now On Doosan Lathe JLM Verified BY:DD		1

Additional Product

Job Number:

Seq. #:	Machine Or Operation:	Description :
1.0	D6103003	Round Billet, Aluminum
	Comment: Qty.: 1.0000 Each(s)/Unit Total : 18.0000 Each(s) Alluminum Round Billet D6103-003 Batch: 36236 RP 08/04/25	
2.0	DOOSAN LATHE	DOOSAN LATHE
	Comment: DOOSAN LATHE 1-Turn as per Dwg DSK 101 & Folio FA625 2-Deburr RP 08/04/25	PRO → ①
3.0	QC2	INSPECT PARTS AS THEY COME OFF MACHINE
	Comment: INSPECT PARTS AS THEY COME OFF MACHINE RP 08/04/25	~~SEE ATTACHED~~ → ①
4.0	HAAS1	HAAS CNC VERTICAL MACHINING #1
	Comment: HAAS CNC VERTICAL MACHINING #1 1-Machine as per Folio FA625 & Dwg D3488 2-Deburr 08/05/11	①
5.0	QC2	INSPECT PARTS AS THEY COME OFF MACHINE
	Comment: INSPECT PARTS AS THEY COME OFF MACHINE 08/05/11	①

Form: mprocess

Dart Aerospace Ltd

W/O:		WORK ORDER CHANGES					
DATE	STEP	PROCEDURE CHANGE	By	Date	Qty	Approval Chief Eng / Prod Mgr	Approval QC Inspector

Part No: D3488-041 PAR #: N/A Fault Category: Prod/Machined, Mts NCR: (Yes) No DQA: Date: 08/07/09
D350-636
QA: N/C Closed: Date: 08/07/07

NCR: 38786

WORK ORDER NON-CONFORMANCE (NCR)

DATE	STEP	Description of NC Section A	Corrective Action Section B: Initial Chief Eng	Action Description Chief Eng	Sign & Date	Verification Section C	Approval Chief Eng	Approval QC Inspector
08/05/12	20	Small groves / markings found at the bottom of the Bore. R.C. chatter from the Boring Bar During the Boring operation on the lath.	08.07.02 per QS1042	Build out the chater marks as Best as Possible. ACCEPTABLE.	08/07/02	08/07/02	08.07.02 per QS1042	08/07/10

NOTE: Date & initial all entries

Date: Friday, 25/04/2008 8:18:43 AM
User: Jean-Luc Menard

Process Sheet

Customer: CU-DAR001 Dart Helicopters Services

Drawing Name: BLADE FITTING

Job Number: 38786

Part Number: D3488041

Job Number:

Seq. #:	Machine Or Operation:	Description :
6.0	QC8	SECOND CHECK

Comment: SECOND CHECK

S 08/05/12 (tc)

Seq. #:	Machine Or Operation:	Description :
7.0	HAND FINISHING1	HAND FINISHING RESOURCE #1

POSITIVE RECALL
EFFECTIVE 08.04.26 MJTH
RELEASED DATE 08.06.10

RW PTO (IX)

Comment: HAND FINISHING RESOURCE #1
Chemical Conversion Coat as per QSI 005 4.1

M. 08/07/02

Seq. #:	Machine Or Operation:	Description :
8.0	POWDER COATING	POWDER COATING

Comment: POWDER COATING
Powder Coat White Gloss (Ref: 4.3.5.1) as per QSI 005 4.3 M 107925

START TIME: 12:30
OVEN TEMPERATURE: 370°
FINISH TIME: 12:55

BR 08-07-03 (D.)

Seq. #:	Machine Or Operation:	Description :
9.0	QC3	INSPECT POWDER COAT/CHEMICAL CONVERSION

Comment: INSPECT POWDER COAT/CHEMICAL CONVERSION

M. 08/07/03 (IX)

Seq. #:	Machine Or Operation:	Description :
10.0	ALS71032225	INSERT

Comment: Qty.: 4.0000 Each(s)/Unit Total : 72.0000 Each(s)
Pick:

Qty	Part Number	Description	Batch
4	ALS7-1032-225	Insert	M100489

M.

Seq. #:	Machine Or Operation:	Description :
11.0	HAND FINISHING1	HAND FINISHING RESOURCE #1

Comment: HAND FINISHING RESOURCE #1
Install Inserts as per Dwg D3488

M. 08/07/03 (IX)

Seq. #:	Machine Or Operation:	Description :
12.0	QC5	INSPECT WORK TO CURRENT STEP

Comment: INSPECT WORK TO CURRENT STEP

S 08/07/02 (20)

Form: process

6/7 CHATTER MARK ACCEPTABLE, BUFF OUT

PG
06.06.10
QSI 042

Date: Friday, 25/04/2008 8:16:43 AM
User: Jean-Luc Menard

Process Sheet

Customer: CU-DAR001 Dart Helicopters Services

Drawing Name: BLADE FITTING

Job Number: 38786

Part Number: D3488041

Job Number:

Seq. #:	Machine Or Operation:	Description :
13.0	PACKAGING 1	PACKAGING RESOURCE #1

Comment: PACKAGING RESOURCE #1
Identify and Stock
Location: FP-8

dd 08-07-07

14.0	QC21	FINAL INSPECTION/W/O RELEASE

08/07/08

Comment: FINAL INSPECTION/W/O RELEASE

Job Completion

mf 08-07-08

Form: rprocess

DART AEROSPACE LTD	Work Order:	38786
Description: Blade Fitting, LH	Part Number:	D3488-1
Inspection Dwg: D3488 Rev: B		Page 1 of 1

FIRST ARTICLE INSPECTION CHECKLIST

[X] First Article [ ] Prototype

Drawing Dimension	Tolerance	Actual Dimension	Accept	Reject	Method of Inspection	Comments
0.125	+/-0.010	.130	—			
2.620	+/-0.010	2.619	—			
0.793	+/-0.010	.797	—			
1.351	+/-0.010	1.345	—			
1.317	+/-0.010	1.319	—			
90°	+/-0.1°	90°	—			
1.802	+/-0.010	1.809	—			
Ø0.508	+0.006/-0.001	Ø.510	—			
R0.062	+/-0.010	R.062	—			
1.500	+/-0.010	1.500	—			
8.000	+0.030/-0.000	8.010	—			
11.18	+/-0.030	11.181	—			
Ø0.484	+0.005/-0.001	Ø.486	—			
1.180	+/-0.010	1.180	—			
3.150	+/-0.010	3.148	—			
3.070	+/-0.010	3.065	—			
0.590	+/-0.010	.598	—			
0.125	+/-0.010	.127	—			
1.005	+/-0.010	1.005	—			
3.500	+/-0.010	3.497	—			
Ø0.297	+0.005/-0.000	Ø.302	—			
Ø0.430	+/-0.010	Ø.432	—			
0.100	+/-0.010	.107	—			

Measured by:	[signature]	Audited by:	DJP	Prototype Approval:	N/A
Date:	08/05/11	Date:	08/05/11	Date:	N/A

Rev	Date	Change	Revised by	Approved
A	06.03.31	New Issue	KJ/JLM [signature]	[signature]

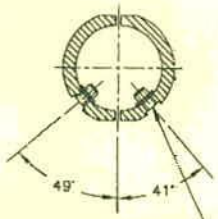

SECTION B–B

ø0.297
C'BORE ø0.430 x 0.100
INSTALL ALS4–1032–225 (OR AKS4–1032–225
OR ALS7–1032–225 OR AKS7–1032–225)
INSERTS AFTER FINISH
(4 PLACES)

4

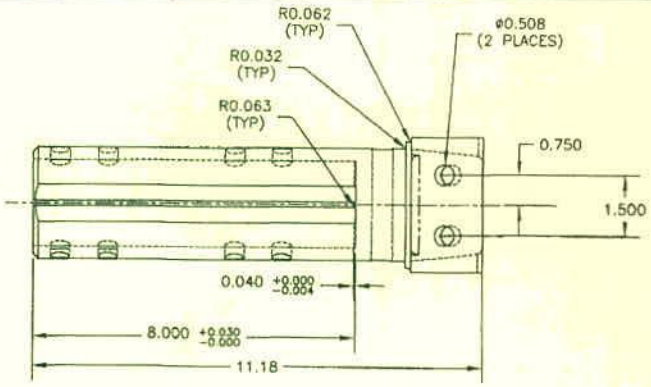

w/o 38286

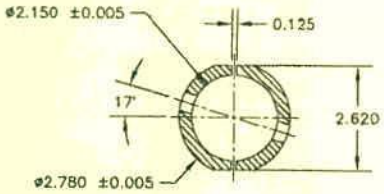

SECTION A–A

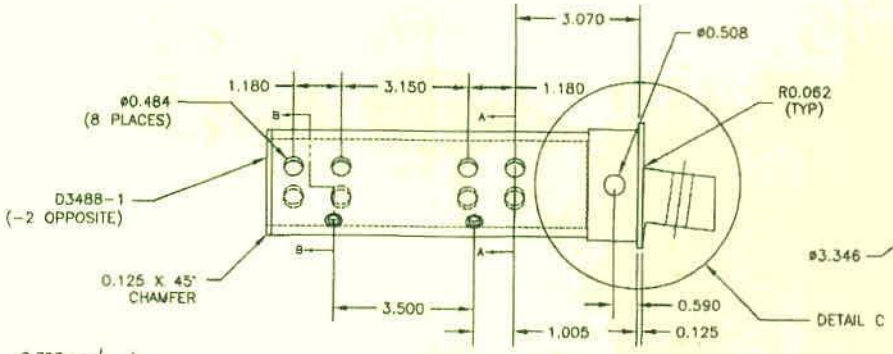

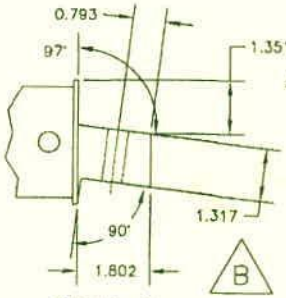

DETAIL C

D3488–041 SHOWN (D3488–042 OPPOSITE)

RELEASED
06.02.07 PH
per DS
ECN #784

D3488–041/–042 BLADE FITTING ASSEMBLY PARTS LIST

QTY -041	QTY -042	PART NUMBER	DESCRIPTION
X		D3488-041	BLADE FITTING ASSEMBLY (LH)
	X	D3488-042	BLADE FITTING ASSEMBLY (RH)
1		D3488-1	BLADE FITTING (LH)
	1	D3488-2	BLADE FITTING (RH)
4	4	AL84-1032-225 or AKS4-1032-225 or AL87-1032-225 or AKS7-1032-225	INSERT

D3488–041/–042 BLADE FITTING

1) MATERIAL: MAKE D3488–1/–2 FROM ALUMINUM 7075–T7351 ROUND BAR PER QQ–A–225/9 (REF. DART MATERIAL SPEC M7075T73R)
2) FINISH: ACID ETCH, ALODINE PER DART QSI 005 4.1
POWDER COAT WHITE (REF 4.3.5.1) PER DART QSI 005 4.3
3) BREAK UNMARKED SHARP EDGES 0.010 TO 0.020
4) INSTALL INSERTS AFTER POWDER COAT
5) ALL DIMENSIONS ARE IN INCHES
6) TOLERANCES ARE PER DART QSI 018 UNLESS OTHERWISE NOTED

B	06.03.15	CHANGE THICKNESS
A	05.12.20	NEW ISSUE

COPYRIGHT © 2005 BY DART AEROSPACE USA, INC.

THIS DOCUMENT IS PRIVATE AND CONFIDENTIAL AND IS SUPPLIED ON THE EXPRESS CONDITION THAT IT IS NOT TO BE USED FOR ANY PURPOSE OR COPIED OR COMMUNICATED TO ANY OTHER PERSON WITHOUT WRITTEN PERMISSION FROM DART AEROSPACE USA, INC.

DESIGN: PH	DRAWN BY: PH	DART AEROSPACE USA, INC. PORT HADLOCK, WA	
CHECKED:	APPROVED:	DRAWING NO. D3488	REV. B SHEET 1 OF 1
DATE: 06.03.15		TITLE: BLADE FITTING	SCALE 1:3

DART

DESIGN	DRAWN BY	DART AEROSPACE USA, INC. PORT HADLOCK, WA
PH	PH	
CHECKED	APPROVED	DRAWING NO. DSK 101
DATE 06.05.09		TITLE D3488-1/-2 TURNING DETAIL
		REV. D SHEET 1 OF 1 SCALE 1:3

A	05.12.21	NEW ISSUE
B	06.03.02	ADD TOLERANCES AND RADIUS
C	06.04.17	0.188 WAS 0.125
D	06.05.09	REMOVE DIAMETER FOR CHAMFER

W/O 38786

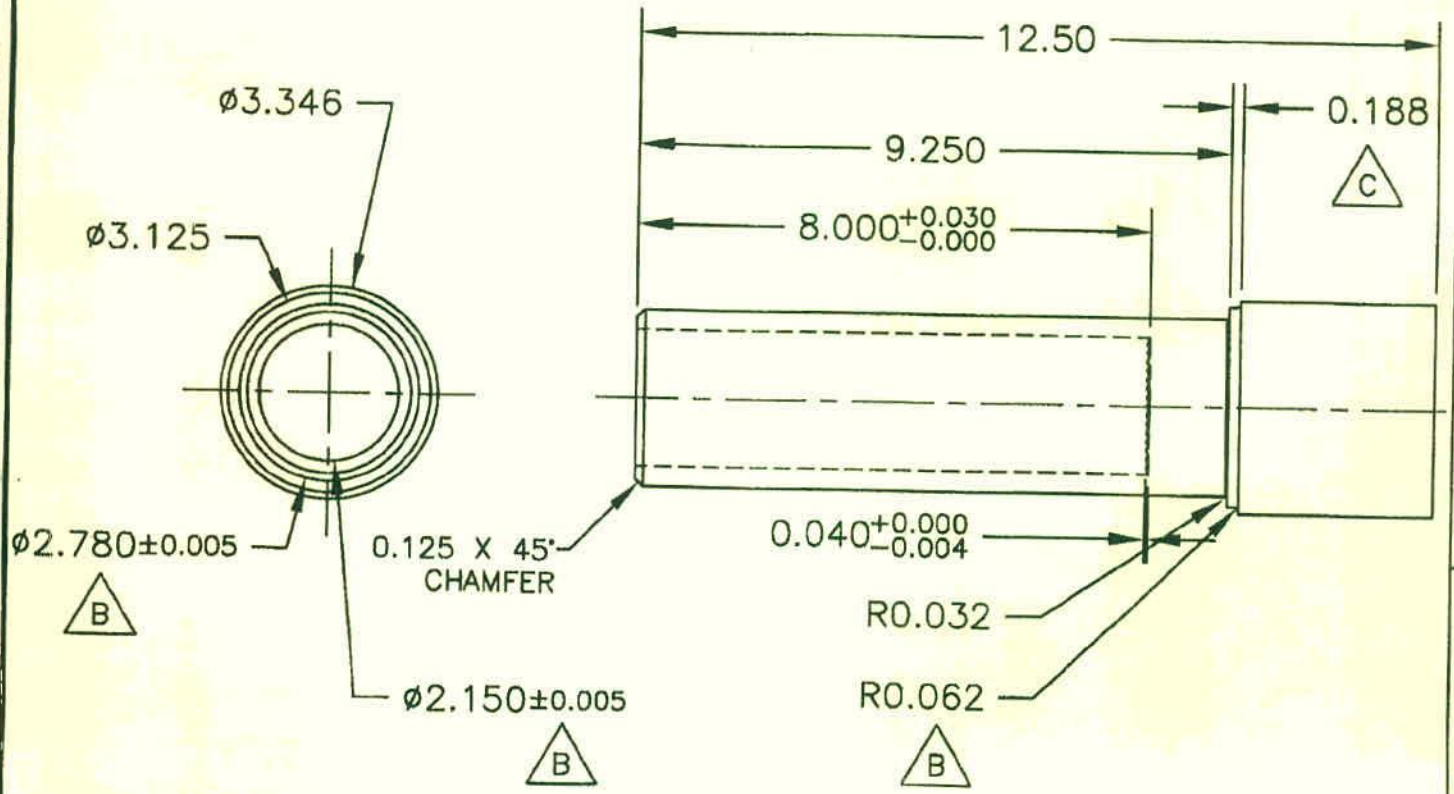

DSK 101

1) MATERIAL: MAKE FROM ALUMINUM 7075-T7351 ROUND BAR PER QQ-A-225/9 (REF. DART MATERIAL SPEC M7075T73R)
2) FINISH: NONE
3) BREAK UNMARKED SHARP EDGES 0.010 TO 0.020
4) ALL DIMENSIONS ARE IN INCHES
5) TOLERANCES ARE PER DART QSI 018 UNLESS OTHERWISE NOTED

Copyright © 2005 by DART AEROSPACE USA, INC.
THIS DOCUMENT IS PRIVATE AND CONFIDENTIAL AND IS SUPPLIED ON THE EXPRESS CONDITION THAT IT IS NOT TO BE USED FOR ANY PURPOSE OR COPIED OR COMMUNICATED TO ANY OTHER PERSON WITHOUT WRITTEN PERMISSION FROM DART AEROSPACE USA, INC.

Dart Aerospace Ltd

W/O:		WORK ORDER CHANGES					
DATE	STEP	PROCEDURE CHANGE	By	Date	Qty	Approval Chief Eng / Prod Mgr	Approval QC Inspector

Part No: D3488-041 PAR #: _____ Fault Category: _____ NCR: Yes No DQA: _____ Date: _____

QA: N/C Closed: _____ Date: _____

NCR: 38786		WORK ORDER NON-CONFORMANCE (NCR)						
			Corrective Action Section B					
DATE	STEP	Description of NC Section A	Initial Chief Eng	Action Description Chief Eng	Sign & Date	Verification Section C	Approval Chief Eng	Approval QC Inspector
08/04/28	2.0	1 piece, the interior of the hole have a big groove R.C. chip Build up on Drill on last Drilling cycle	08/04/28	Scrapped Destroy and Replace. B# 36236	08/04/28	08/04/28	08/04/28	08/04/28
08.04.28	2	Minor chatter mark @ 7.33" depth	PH PO 05 012 08.04.28	ACCEPTABLE DEVIATION	08/04/28	08/04/28	PH 08.04.28 PH 25 012 08.04.28	08/04/28

NOTE: Date & initial all entries